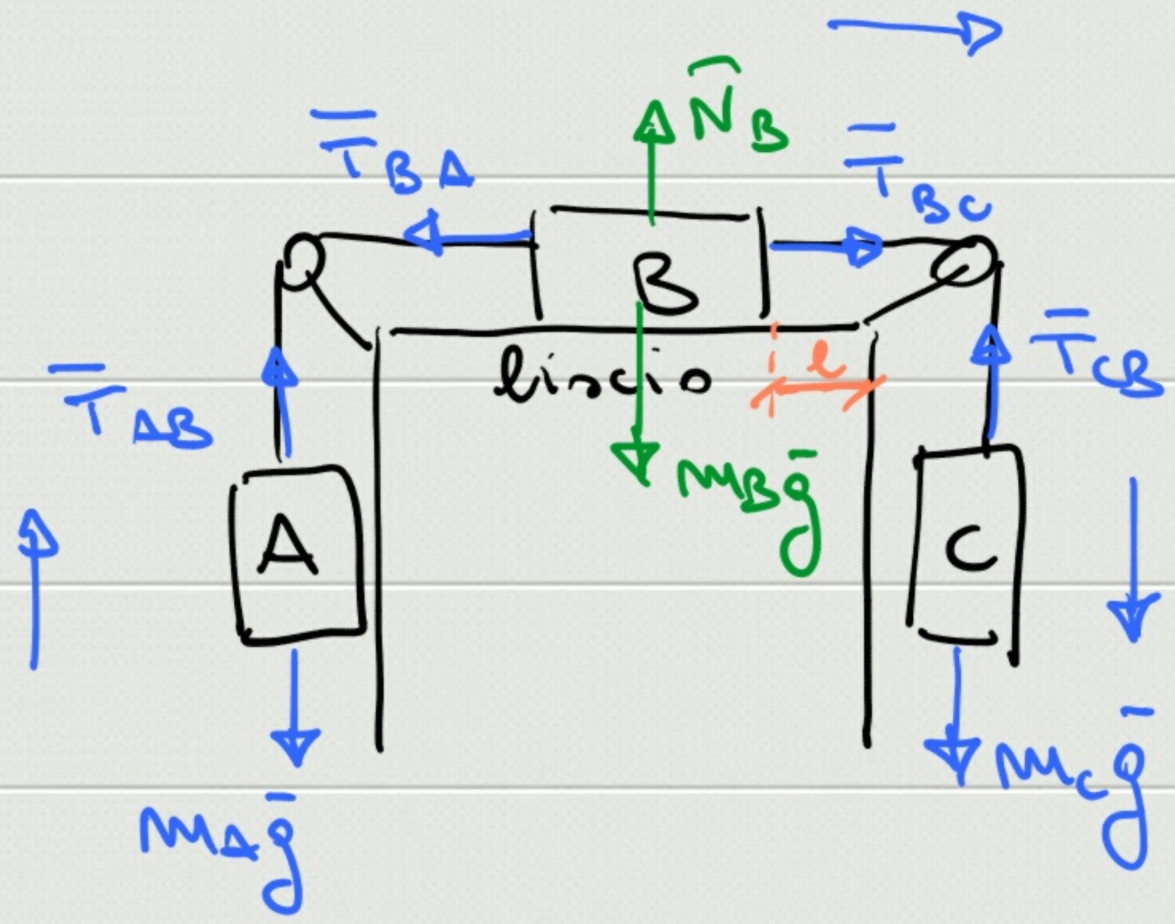

$l = 0.4\ m \Rightarrow v_B = ?$

$m_A = 1\ kg$

$m_B = 2\ kg$

$m_C = 3\ kg$

$a_B = ?$ tensioni fili

$$\boxed{\sum_i \bar{F}_i = m\bar{a}}$$

$$\begin{cases} \cancel{T_{AB}} - m_A g = m_A a \\ \cancel{T_{BC}} - \cancel{T_{BA}} = m_B a \\ m_C g - \cancel{T_{CB}} = m_C a \end{cases}$$

$$T_{BC} + T_{BA} = m_B a$$

$$T_{BC} - T_{BA} = m_B a$$

$$-T_{BC} - T_{BA} = m_B a$$

$$-T_{BC} + T_{BA} = m_B a$$

$$(m_C - m_A) g = (m_A + m_B + m_C) a$$

$$a_B = a = \frac{m_C - m_A}{m_A + m_B + m_C} g = \frac{1}{3} g \simeq 3.3\ m/s^2$$

$$T_{AB} = m_A (a + g) = \frac{4}{3} m_A g = 13.1\ N$$

$$T_{CB} = m_C (g - a) = \frac{2}{3} m_C g = 19.6\ N$$

$$v_B^2 = \overset{0}{\overset{\shortparallel}{v_{B0}^2}} + 2 a_B l \Rightarrow v_B = \sqrt{2 a l} = 1.62\ m/s$$

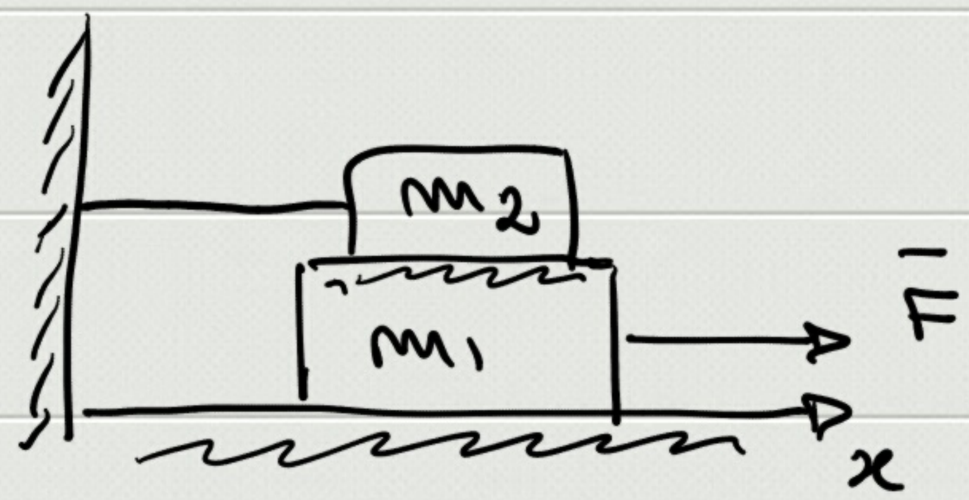

$m_1 = 2$ kg

$m_2 = 0.5$ kg

μ_s, μ_d

F_{max} (statica) $= 9$ N

μ_s, T

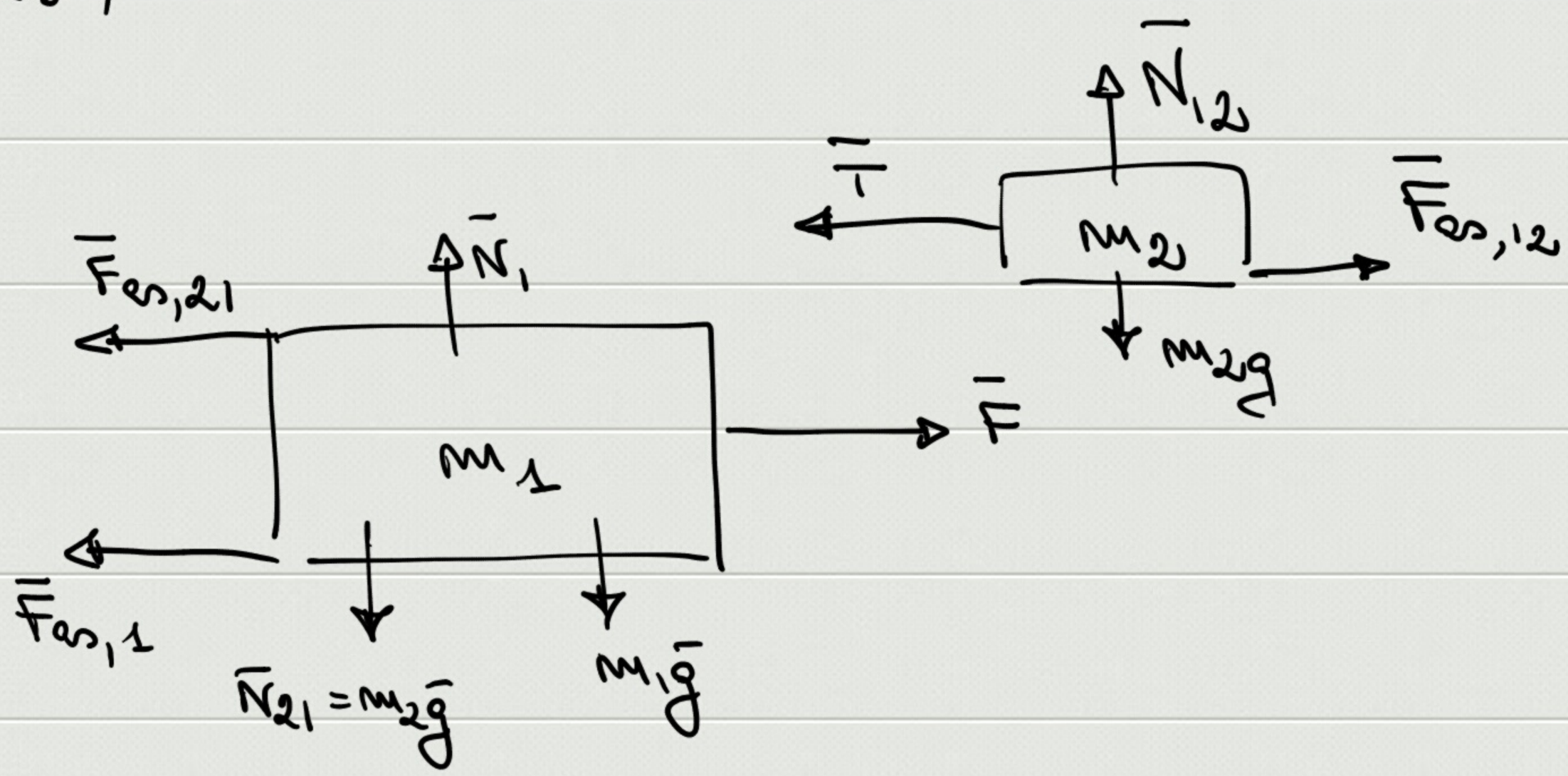

$$F - F_{es,1} - F_{es,21} = 0 \Rightarrow F = F_{es,1} + F_{es,21} \leq F_{es,1,max} + F_{es,21,max}$$

$$\Rightarrow F \leq \mu_s N_1 + \mu_s N_{12} = \mu_s (m_1 + m_2) g + \mu_s m_2 g =$$

$$= \mu_s (m_1 + 2 m_2) g = F_{max}$$

$$\Rightarrow \mu_s = \frac{F_{max}}{(m_1 + 2 m_2) g} = 0.33$$

$$T = F_{es,12} = \mu_s N_{12} = \mu_s m_2 g = 1.65 \text{ N}$$

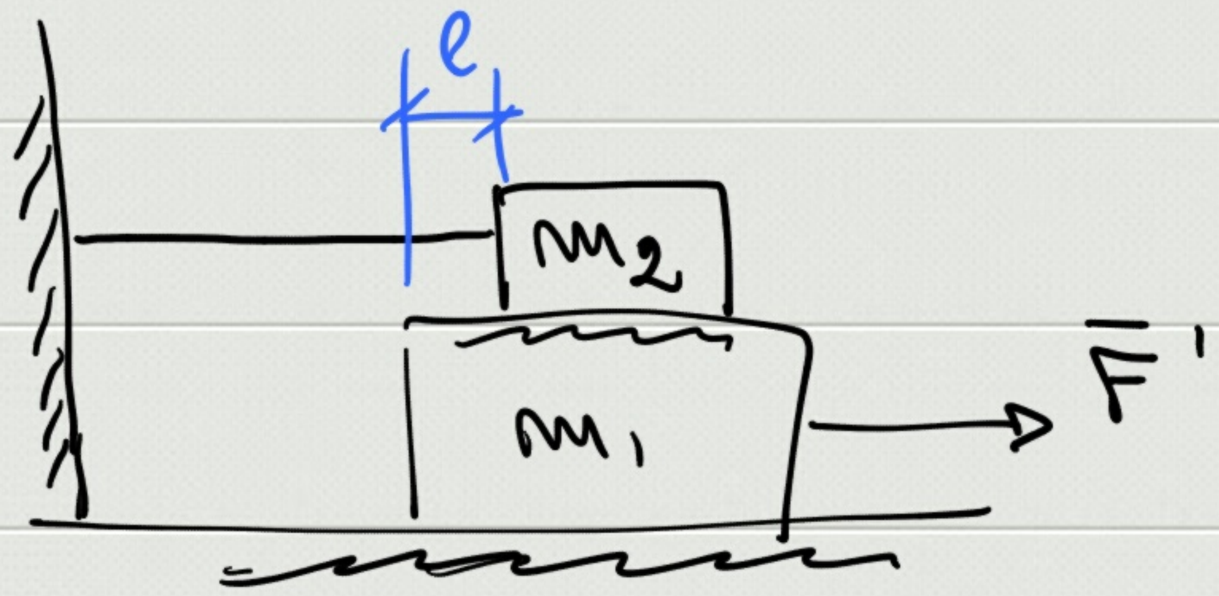

$F' = 10\,N \; (> F_{max})$

$T' = 1\,N$

$l = 0.1\,m$

$t'(l=0)$, μ_d

- $F - \mu_d (m_1 + m_2) g = m_1 a_1$
- $F - \mu_d (m_1 + m_2) g - \mu_d m_2 g = m_1 a_1$ *
- $\mu_d m_2 g - T' = m_2 a_1$
- $F - \mu_d m_2 g - T' = 0$
- $\mu_d m_2 g - T' = 0$ *

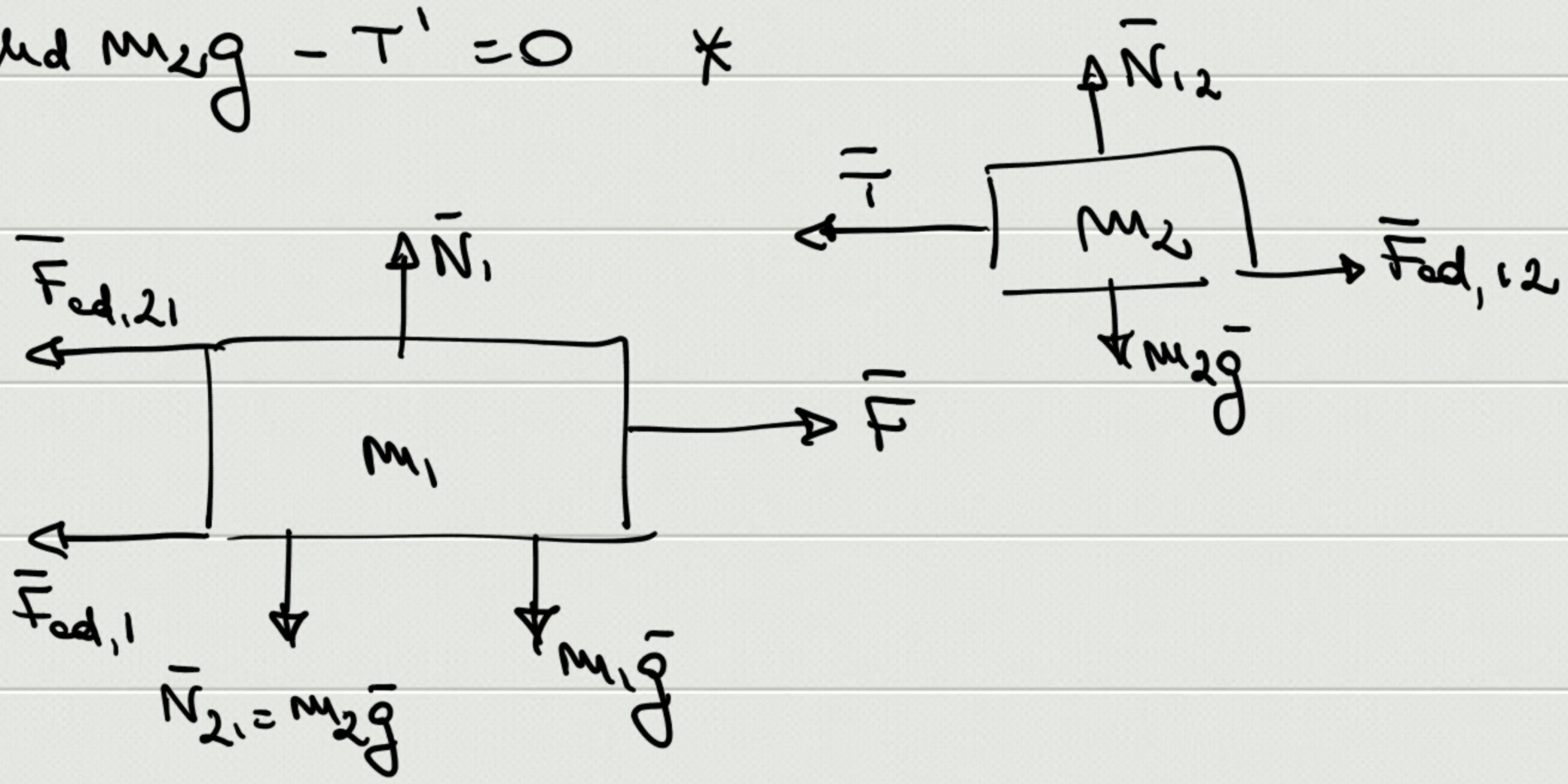

$F - \mu_d N_1 - \mu_d N_{12} = m_1 a_1$

$F - \mu_d (m_1 + m_2) g - \mu_d m_2 g = m_1 a_1$

$F_{ad,12} - T' = 0 \Rightarrow \mu_d m_2 g - T' = 0 \Rightarrow \mu_d = \dfrac{T'}{m_2 g} = 0.2$

$$a_1 = \frac{F - \mu_d(m_1 + 2m_2)g}{m_1} = 2\ m/s^2$$

$$l = \frac{1}{2} a_1 t'^2 \Rightarrow t' = \sqrt{\frac{2l}{a_1}} = 0.33\ s$$